Shown by WWW.LCD-SCREEN.COM.UA

SPECIFICATION
FOR
APPROVAL

( ) **Preliminary Specification**
( ) **Final Specification**

Title	13.3” HD TFT LCD

BUYER	Forte
MODEL	

SUPPLIER	LG Display Co., Ltd.
*MODEL	LP133WH2
Suffix	TLA2

*When you obtain standard approval,
please use the above model name without suffix

APPROVED BY	SIGNATURE
/	
/	
/	

Please return 1 copy for your confirmation with your signature and comments.

APPROVED BY	SIGNATURE
K. J. KWON / S.Manager	
REVIEWED BY	
G. J. Han / Manager	
PREPARED BY	
C. Y. Kim / Engineer **S. C. Jung / Engineer**	

Product Engineering Dept.
LG Display Co., Ltd

Shown by WWW.LCD-SCREEN.COM.UA

Contents

No	ITEM	Page
	COVER	
	CONTENTS	1
	RECORD OF REVISIONS	2
1	GENERAL DESCRIPTION	3
2	ABSOLUTE MAXIMUM RATINGS	4
3	ELECTRICAL SPECIFICATIONS	
3-1	ELECTRICAL CHARACTREISTICS	5
3-2	INTERFACE CONNECTIONS	6
3-3	SIGNAL TIMING SPECIFICATIONS	8
3-4	SIGNAL TIMING WAVEFORMS	8
3-5	COLOR INPUT DATA REFERNECE	9
3-6	POWER SEQUENCE	10
4	OPTICAL SFECIFICATIONS	11
5	MECHANICAL CHARACTERISTICS	15
6	RELIABLITY	18
7	INTERNATIONAL STANDARDS	
7-1	SAFETY	19
7-2	EMC	19
8	PACKING	
8-1	DESIGNATION OF LOT MARK	20
8-2	PACKING FORM	20
9	PRECAUTIONS	21
A	APPENDIX A. Enhanced Extended Display Identification Data	23

Shown by WWW.LCD-SCREEN.COM.UA

RECORD OF REVISIONS

Revision No	Revision Date	Page	Description	EDID ver
0.0	18. Sep. 2008	-	First Draft	-

Shown by WWW.LCD-SCREEN.COM.UA

1. General Description

The LP133WH2 is a Color Active Matrix Liquid Crystal Display with an integral LED backlight system. The matrix employs a-Si Thin Film Transistor as the active element. It is a transmissive type display operating in the normally white mode. This TFT-LCD has 13.3 inches diagonally measured active display area with WXGA resolution(1366 horizontal by 768 vertical pixel array). Each pixel is divided into Red, Green and Blue sub-pixels or dots which are arranged in vertical stripes. Gray scale or the brightness of the sub-pixel color is determined with a 6-bit gray scale signal for each dot, thus, presenting a palette of more than 262,144 colors.

The LP133WH2 has been designed to apply the interface method that enables low power, high speed, low EMI.

The LP133WH2 is intended to support applications where thin thickness, low power are critical factors and graphic displays are important. In combination with the vertical arrangement of the sub-pixels, the LP133WH2 characteristics provide an excellent flat display for office automation products such as Notebook PC.

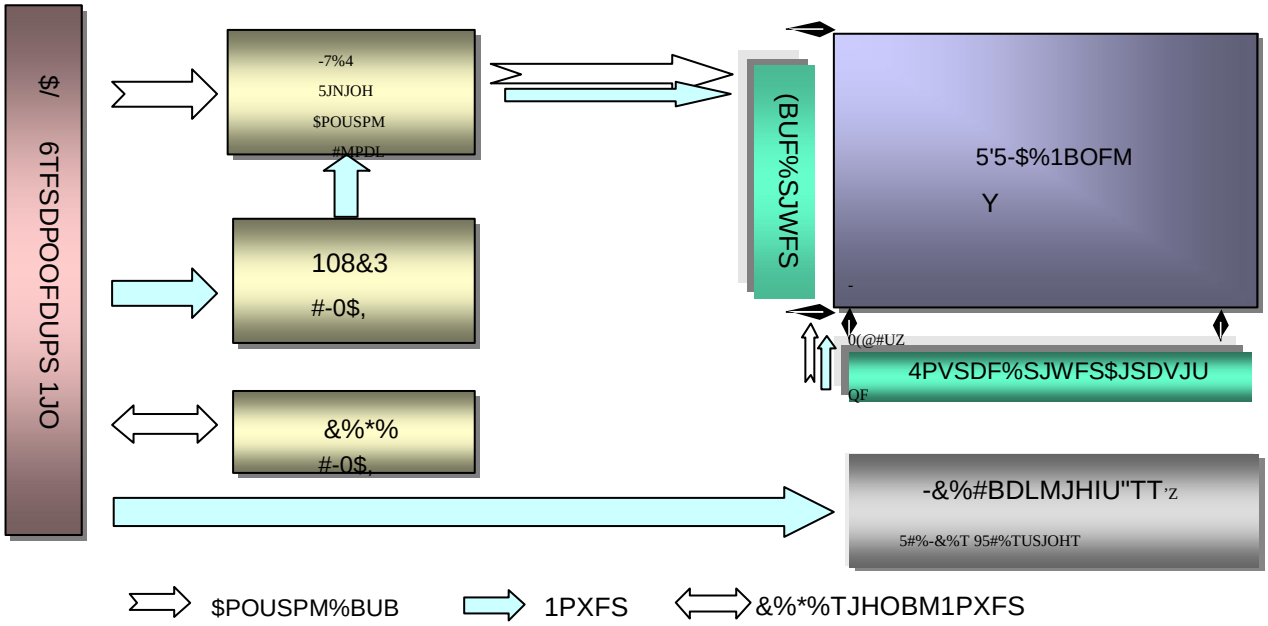

General Features

Active Screen Size	13.3 inches diagonal
Outline Dimension	306.2(Typ. H) ƒ 177.6(Typ. V) ƒ 3.5(D, Max.) mm
Pixel Pitch	0.2148 ƒ 0.2148 mm
Pixel Format	1366 horiz. by 768 vert. Pixels RGB strip arrangement
Color Depth	6-bit, 262,144 colors
Luminance, White	220 cd/m2(Typ., @I_{LED}=TBDmA)
Power Consumption	Logic : 0.9 W (Max.@Mosaic), Back Light : 3.5W (Max.@ I_{LED}=TBDmA)
Weight	300g(Max.)
Display Operating Mode	Transmissive mode, normally white
Surface Treatment	Hard coating(3H), Glare treatment of the front Polarizer (Haze 0%)

Shown by WWW.LCD-SCREEN.COM.UA

2. Absolute Maximum Ratings

The following are maximum values which, if exceeded, may cause faulty operation or damage to the unit.

Table 1. ABSOLUTE MAXIMUM RATINGS

Parameter	Symbol	Values		Units	Notes
		Min	Max		
Power Input Voltage	VCC	-0.3	4.0	Vdc	at 25 ± 5°C
Operating Temperature	TOP	0	50	°C	1
Storage Temperature	HST	-20	60	°C	1
Operating Ambient Humidity	HOP	10	90	%RH	1
Storage Humidity	HST	10	90	%RH	1

Note : 1. Temperature and relative humidity range are shown in the figure below.
Wet bulb temperature should be 39°C Max, and no condensation of water.

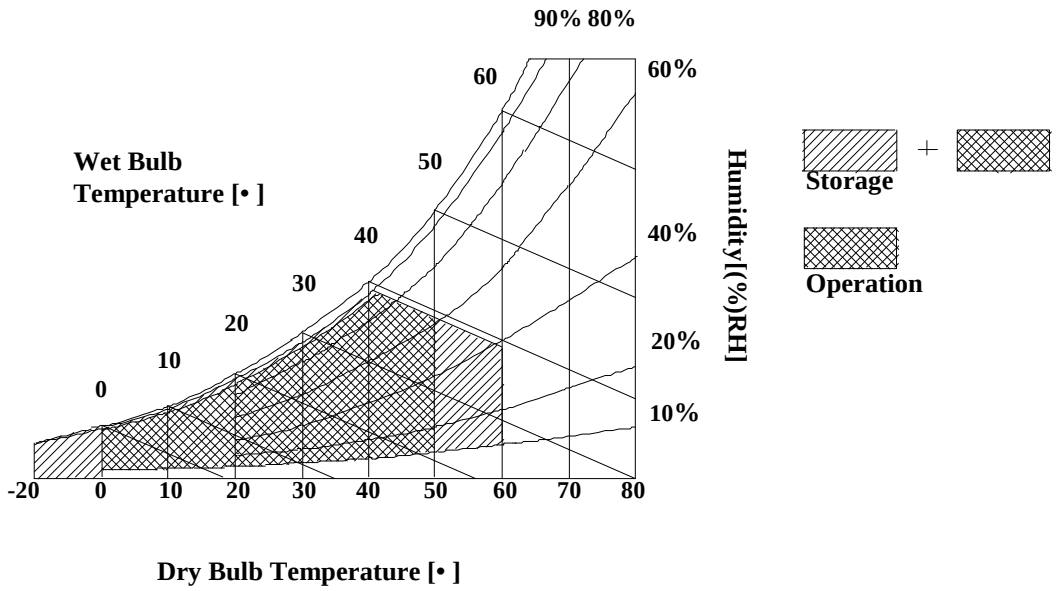

Shown by WWW.LCD-SCREEN.COM.UA

3. Electrical Specifications

3-1. Electrical Characteristics

The LP33WH2 requires two power inputs. The first logic is employed to power the LCD electronics and to drive the TFT array and liquid crystal. The second backlight is the input about LED BL.with LED Driver.

Table 2. ELECTRICAL CHARACTERISTICS

Parameter	Symbol	Values			Unit	Notes
		Min	Typ	Max		
LOGIC :						
Power Supply Input Voltage	V_{CC}	3.0	3.3	3.6	V	
Power Supply Input Current	I_{CC}	-	245	280	mA	1
Power Consumption	P_{CC}	-	0.8	0.9	W	1
Power Supply Inrush Current	I_{CC_P}	-	-	TBD	mA	
LVDS Impedance	Z_{LVDS}	90	100	110	o	2
BACKLIGHT : (with LED Driver)						
LED Power Input Voltage	V_{LED}	7	TBD	20	V	
LED Power Input Current	I_{LED}	5.0	20.0	21.0	mA	3
LED Power Comsumption	P_{LED}	-	3.1	3.4	W	3
LED Power Inrush Current	I_{LED_P}	-	-	TBD	mA	
PWM Dimming (Duty) Ratio	-	12.5	-	100	%	4
PWM Impedance	Z_{PWM}	TBD	TBD	TBD	o	
PWM Frequency	F_{PWM}	200		1500	Hz	5
PWM High Level Voltage	V_{PWM_H}	2.1	3.3	5	V	
PWM Low Level Voltage	V_{PWM_L}	0	-	0.8	V	
LED_EN High Voltage	$V_{LED_EN_H}$	2.1	3.3	5	V	
LED_EN Low Voltage	$V_{LED_EN_L}$	0	-	0.8	V	
Life Time		12,000	-	-	Hrs	6

Note)

1. The specified Icc current and power consumption are under the Vcc = 3.3V , 25• , fv = 60Hz condition whereas Mosaic pattern is displayed and fv is the frame frequency.

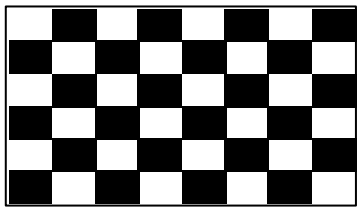

2. This impedance value is needed to proper display and measured form LVDS Tx to the mating connector.
3. The specified LED current and power consumption are under the Vled = 12.0V , 25• , Dimming of Max luminance whereas White pattern is displayed and fv is the frame frequency.
4. The operation of LED Driver below minimum dimming ratio may cause flikering or relaibility issue.
5. This Spec. is not effective at 100% dimming ratio as an exception because it has DC level equivalent to 0Hz. In spite of acceptable range as defined, the PWM Frequency should be fixed and stable for more consistent brightness control at any specific level desired.
6. The life time is determined as the time at which brightness of LCD is 50% compare to that of minimum value at Table 7. These LED backlight has 6 strings on it and the typical current of LED's string is base on Table 2.

Shown by WWW.LCD-SCREEN.COM.UA

3-2. Interface Connections

This LCD employs two interface connections, a 40 pin connector is used for the module electronics interface and the other connector is used for the integral backlight system.
The electronics interface connector is a model UJU 20455-040E manufactured by UJU.

Table 3. MODULE CONNECTOR PIN CONFIGURATION (CN1)

1JO	4ZNCPM	%FTDSJQUJPO	/PUFT
	/$	/P$POOFDUJPO	<-7%43FDFJWFS>
	7%%	1PXFS4VQQMZ_7	
	7%%	1PXFS4VQQMZ_7	
	7&%*%	&%*%_71PXFS	
	/$	3FTFSWFE#*45	
	$-,&%*%	&%*%$MPDL*OQVU	<$POOFDUPS>
	%"5"&%*%	&%*%%BUB*OQVU	UJU 20455-040E
	0EE3Y*/	-7%4%JGGFSFOUJBM%BUB*/16533(	<.BUJOH$POOFDUPS>
	0EE3Y*/_	_-7%4%JGGFSFOUJBM%BUB*/16533(	20345-#40E-## series
	744	(SPVOE	or equivalent
	0EE3Y*/	-7%4%JGGFSFOUJBM%BUB	
	0EE3Y*/_	_-7%4%JGGFSFOUJBM%BUB	<$POOFDUPSQJOBSSBOHFNFOU>
	744	(SPVOE	
	0EE3Y*/	-7%4%JGGFSFOUJBM%BUB	
	0EE3Y*/_	_-7%4%JGGFSFOUJBM%BUB*/165##)474%&	
	744	(SPVOE	
	0EE3Y$,*/	-7%4%JGGFSFOUJBM$MPDL*/165	40 1
	0EE3Y$,*/_	_-7%4%JGGFSFOUJBM$MPDL*/165	
	744	(SPVOE	
	NC	No Connection	
	NC	No Connection	
	GND	Ground	
	NC	No Connection	
	NC	No Connection	
	GND	Ground	
	NC	No Connection	
	NC	No Connection	
	GND	Ground	
	NC	No Connection	
	NC	No Connection	
	7-&%@(/%	-&%(SPVOE	
	7-&%@(/%	-&%(SPVOE	
	7-&%@(/%	-&%(SPVOE	
	/$	/P$POOFDUJPO	
	#-*.	18.GPSMVNJOBODFDPOUSPM	
	#-@PO	#BDLMJHIU0O0GG$POUSPMPO7_7PGG_7	
	/$	3FTFSWFE	
	7-&%	-&%1PXFS4VQQMZ77	
	7-&%	-&%1PXFS4VQQMZ77	
	7-&%	-&%1PXFS4VQQMZ77	

Shown by WWW.LCD-SCREEN.COM.UA

3-3. LVDS Signal Timing Specifications

3-3-1. DC Specification

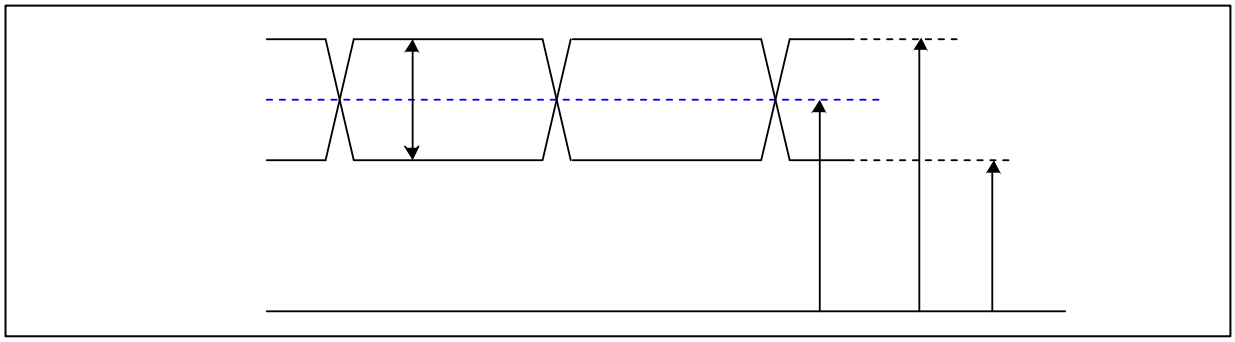

Description	Symbol	Min	Max	Unit	Notes
LVDS Differential Voltage	$\|V_{ID}\|$	100	600	mV	-
LVDS Common mode Voltage	V_{CM}	0.6	1.8	V	-
LVDS Input Voltage Range	V_{IN}	0.3	2.1	V	-

3-3-2. AC Specification

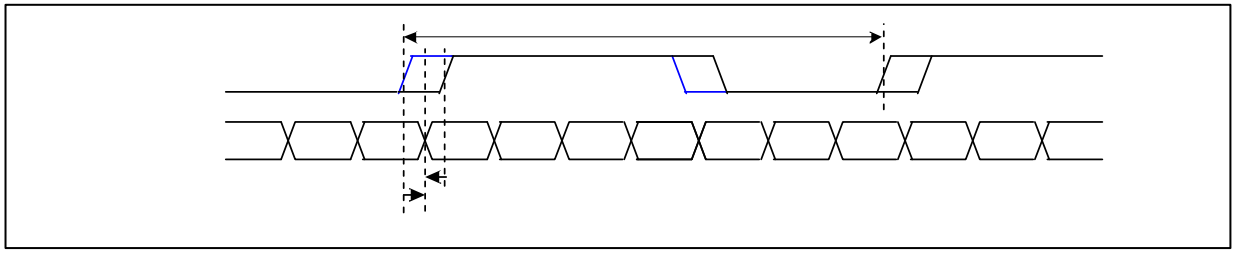

Description	Symbol	Min	Max	Unit	Notes
LVDS Clock to Data Skew Margin	t_{SKEW}	- 400	+ 400	ps	85MHz > Fclk ‡ 65MHz
	t_{SKEW}	- 600	+ 600	ps	65MHz > Fclk ‡ 25MHz
LVDS Clock to Clock Skew Margin (Even to Odd)	t_{SKEW_EO}	- 1/7	+ 1/7	T_{clk}	-
Maximum deviation of input clock frequency during SSC	F_{DEV}	-	, 3	%	-
Maximum modulation frequency of input clock during SSC	F_{MOD}	-	200	KHz	

LVDS –

LVDS +

|V

Shown by WWW.LCD-SCREEN.COM.UA

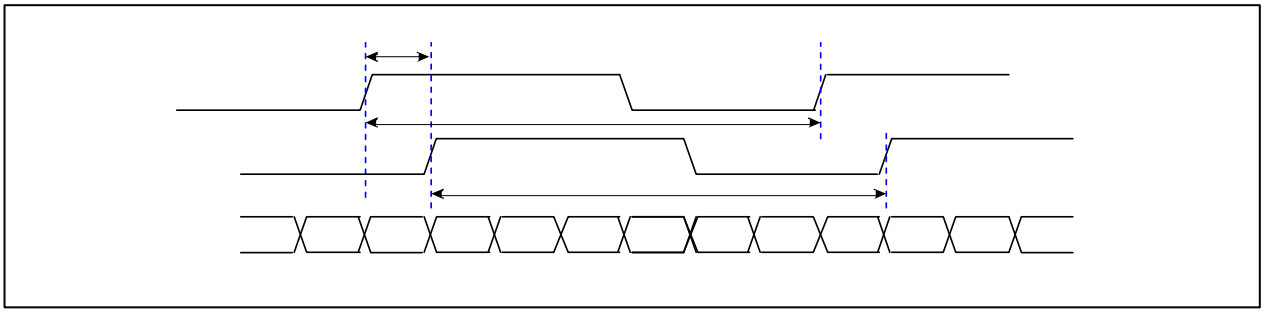

< Clock skew margin between channel >

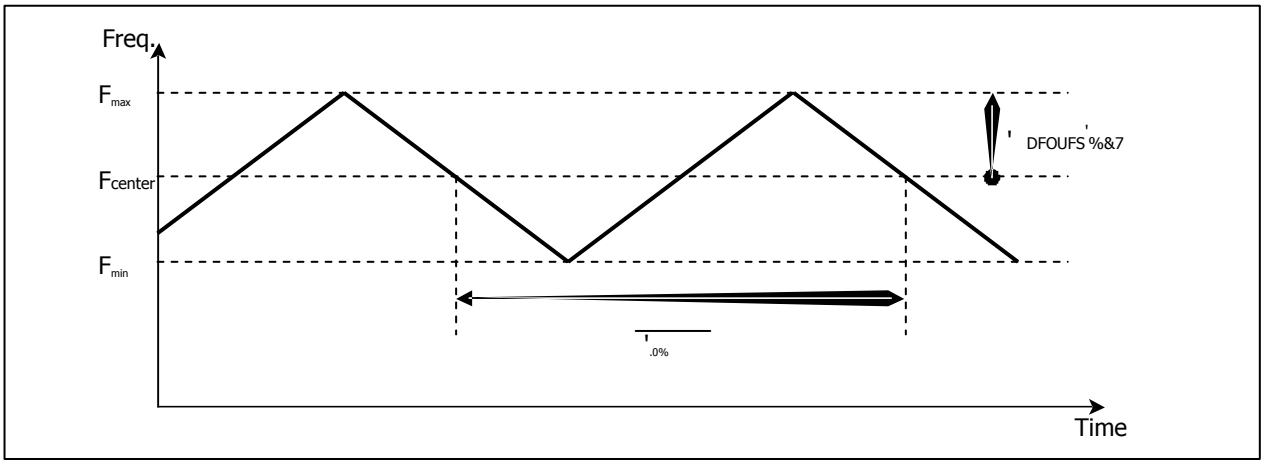

< Spread Spectrum >

3-3-3. Data Format

1) LVDS 1 Port

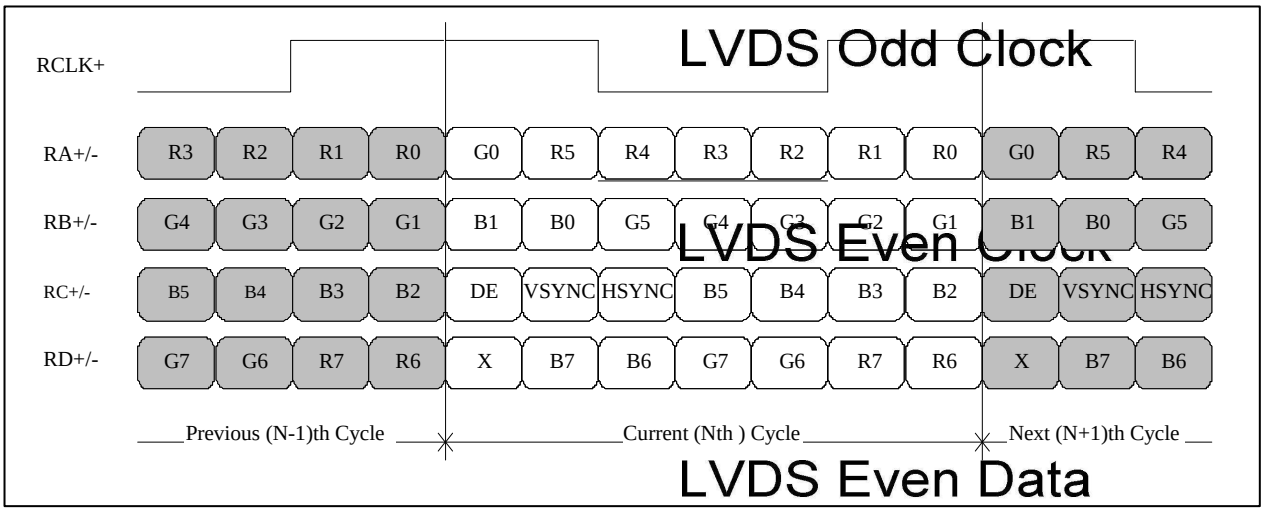

< LVDS Data Format >

Shown by WWW.LCD-SCREEN.COM.UA

3-4. Signal Timing Specifications

This is the signal timing required at the input of the User connector. All of the interface signal timing should be satisfied with the following specifications and specifications of LVDS Tx/Rx for its proper operation.

Table 4. TIMING TABLE

*5&.	4ZNCPM		.J	5ZQ	.BY	6OJU	/PUF
DCLK	Frequency	$G_{\$-,}$	O -	72.3	-	.)[	
Hsync	Period	$U_{)1}$	TBD	1526	TBD	U$-,	
	Width	$U_{8)}$	TBD	32	TBD		
	Width-Active	$UX_{)"}$	TBD	1366	TBD		
Vsync	Period	U_{71}	TBD	790	TBD	U)1	
	Width	U_{87}	TBD	5	TBD		
	Width-Active	$UX_{7"}$	TBD	768	TBD		
Data Enable	Horizontal back porch	U_{HBP}	TBD	80	TBD	U$-,	
	Horizontal front porch	$U_{)'1}$	TBD	48	TBD		
	Vertical back porch	$U_{7\#1}$	TBD	14	TBD	U)1	
	Vertical front porch	$U_{7'1}$	TBD	3	TBD		

3-5. Signal Timing Waveforms

Condition : V_{cc}=3.3V

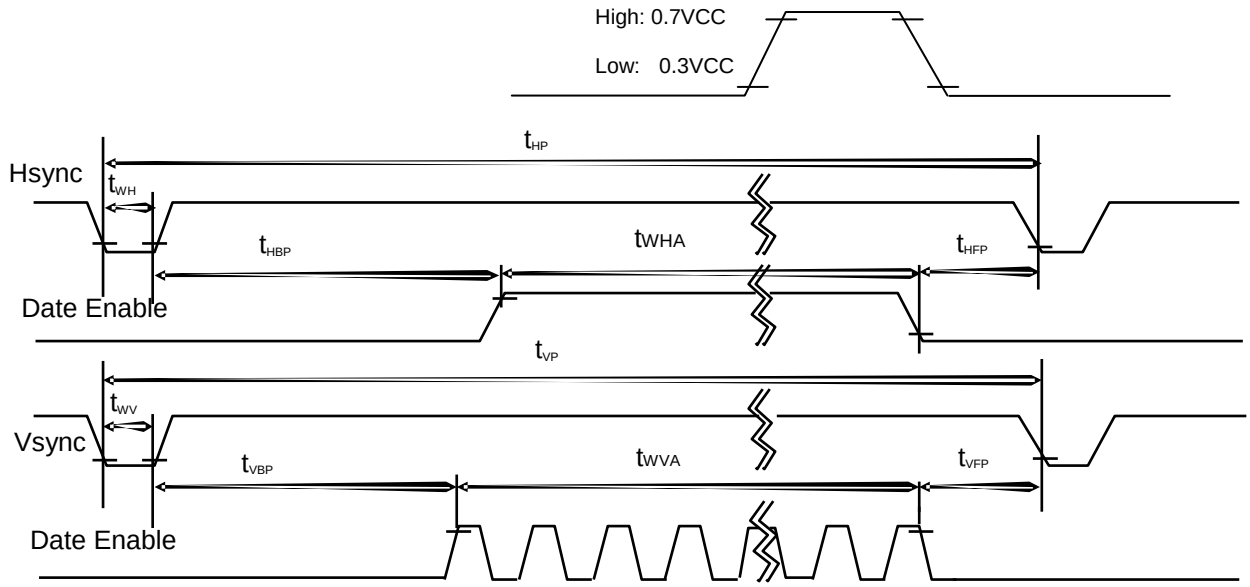

Shown by WWW.LCD-SCREEN.COM.UA

3-6. Color Input Data Reference

The brightness of each primary color (red,green and blue) is based on the 6-bit gray scale data input for the color ; the higher the binary input, the brighter the color. The table below provides a reference for color versus data input.

Table 5. COLOR DATA REFERENCE

Color		Input Color Data																	
		RED						GREEN						BLUE					
		MSB					LSB	MSB					LSB	MSB					LSB
		R5	R4	R3	R2	R1	R0	G5	G4	G3	G2	G1	G0	B5	B4	B3	B2	B1	B0
Basic Color	Black	0	0	0	0	0	0	0	0	0	0	0	0	0	0	0	0	0	0
	Red	1	1	1	1	1	1	0	0	0	0	0	0	0	0	0	0	0	0
	Green	0	0	0	0	0	0	1	1	1	1	1	1	0	0	0	0	0	0
	Blue	0	0	0	0	0	0	0	0	0	0	0	0	1	1	1	1	1	1
	Cyan	0	0	0	0	0	0	1	1	1	1	1	1	1	1	1	1	1	1
	Magenta	1	1	1	1	1	1	0	0	0	0	0	0	1	1	1	1	1	1
	Yellow	1	1	1	1	1	1	1	1	1	1	1	1	0	0	0	0	0	0
	White	1	1	1	1	1	1	1	1	1	1	1	1	1	1	1	1	1	1
RED	RED (00)	0	0	0	0	0	0	0	0	0	0	0	0	0	0	0	0	0	0
	RED (01)	0	0	0	0	0	1	0	0	0	0	0	0	0	0	0	0	0	0
	...	...						...						...					
	RED (62)	1	1	1	1	1	0	0	0	0	0	0	0	0	0	0	0	0	0
	RED (63)	1	1	1	1	1	1	0	0	0	0	0	0	0	0	0	0	0	0
GREEN	GREEN (00)	0	0	0	0	0	0	0	0	0	0	0	0	0	0	0	0	0	0
	GREEN (01)	0	0	0	0	0	0	0	0	0	0	0	1	0	0	0	0	0	0
	...	...						...						...					
	GREEN (62)	0	0	0	0	0	0	1	1	1	1	1	0	0	0	0	0	0	0
	GREEN (63)	0	0	0	0	0	0	1	1	1	1	1	1	0	0	0	0	0	0
BLUE	BLUE (00)	0	0	0	0	0	0	0	0	0	0	0	0	0	0	0	0	0	0
	BLUE (01)	0	0	0	0	0	0	0	0	0	0	0	0	0	0	0	0	0	1
	...	...						...						...					
	BLUE (62)	0	0	0	0	0	0	0	0	0	0	0	0	1	1	1	1	1	0
	BLUE (63)	0	0	0	0	0	0	0	0	0	0	0	0	1	1	1	1	1	1

Shown by WWW.LCD-SCREEN.COM.UA

3-7. Power Sequence

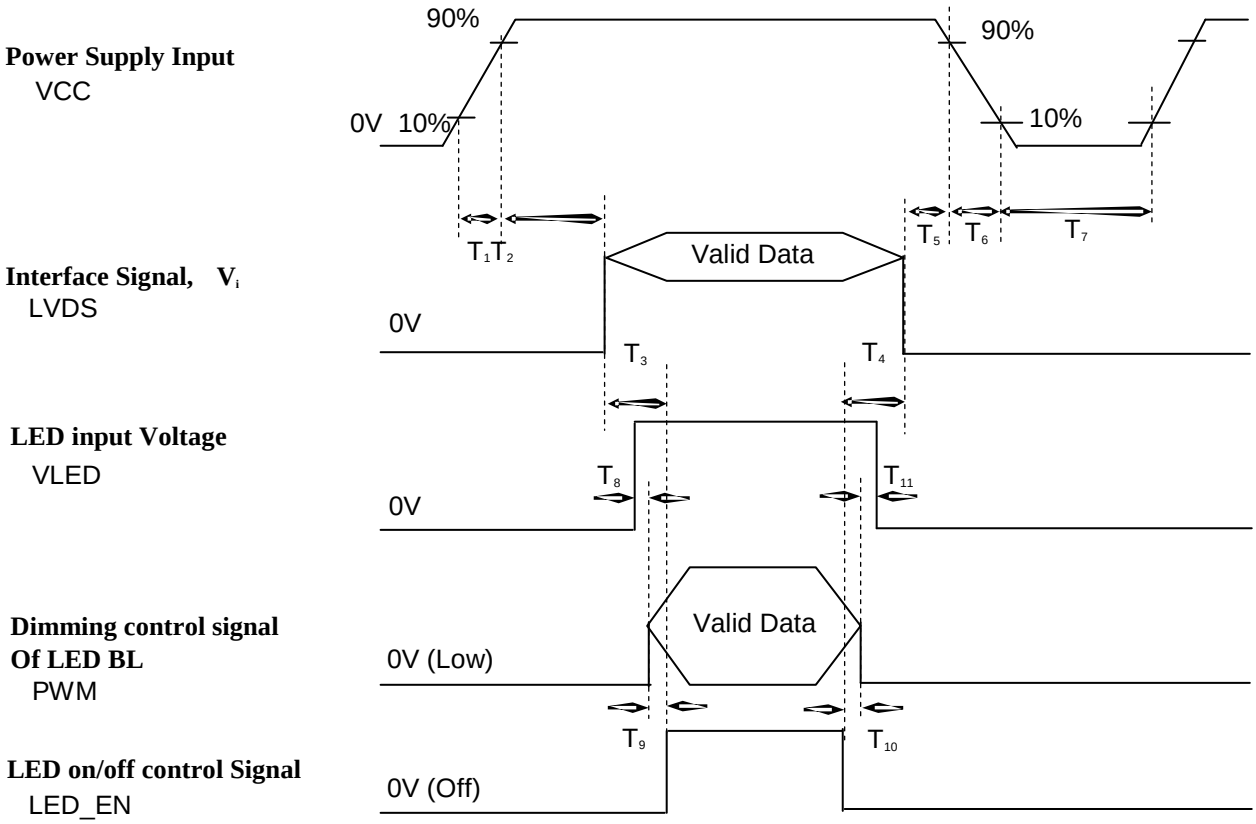

Table 6. POWER SEQUENCE TABLE

Parameter	Value			Units
	Min.	Typ.	Max.	
T_1	0.5	-	10	ms
T_2	0	-	50	ms
T_3	200	-	-	ms
T_4	200	-	-	ms
T_5	0	-	50	ms
T_6	3	-	10	ms
T_7	400	-	-	ms
T_8	50	-	100	ms
T_9	0	-	100	ms
T_{10}	0	-	100	ms
T_{11}	50	-	100	ms

Note)
1. Valid Data is Data to meet “3-3. LVDS Signal Timing Specifications”
2. Please avoid floating state of interface signal at invalid period.
3. When the interface signal is invalid, be sure to pull down the power supply for LCD VCC to 0V.
4. LED power must be turn on after power supply for LCD and interface signal are valid.

Shown by WWW.LCD-SCREEN.COM.UA

4. Optical Specification

Optical characteristics are determined after the unit has been 'ON' and stable for approximately 20 minutes in a dark environment at 25°C. The values specified are at an approximate distance 50cm from the LCD surface at a viewing angle of Φ and Θ equal to 0°.
FIG. 1 presents additional information concerning the measurement equipment and method.

FIG. 1 Optical Characteristic Measurement Equipment and Method

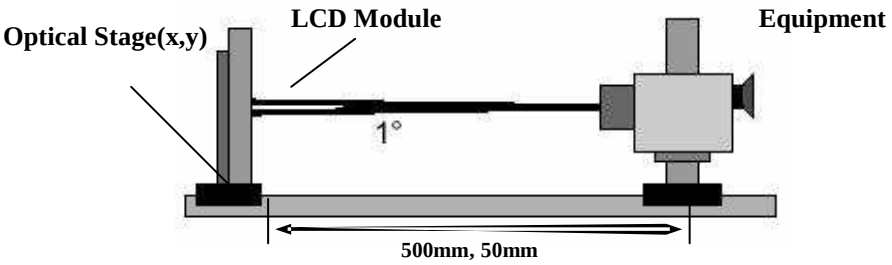

Table 7. OPTICAL CHARACTERISTICS

Ta=25°C, VCC=3.3V, fv=60Hz, f_{CLK}= 97.75MHz, ILED =TBD mA

Parameter	Symbol	Values			Units	Notes
		Min	Typ	Max		
Contrast Ratio	CR	300	500	-		1
Surface Luminance, white	L_{WH}	190	220	-	cd/m²	2
Luminance Variation	δ_{WHITE}		1.4	1.6		3
Response Time	5S 3 _ 5S %	-	16	25	ms	4
Color Coordinates						
RED	RX	TBD	TBD	TBD		
	RY	TBD	TBD	TBD		
GREEN	GX	TBD	TBD	TBD		
	GY	TBD	TBD	TBD		
BLUE	BX	TBD	TBD	TBD		
	BY	TBD	TBD	TBD		
WHITE	WX	0.283	0.313	0.343		
	WY	0.299	0.329	0.359		
Viewing Angle						5
x axis, right(Φ=0°)	Θr	40			degree	
x axis, left (Φ=180°)	Θl	40			degree	
y axis, up (Φ=90°)	Θu	10			degree	
y axis, down (Φ=270°)	Θd	30			degree	
Gray Scale						6

Shown by WWW.LCD-SCREEN.COM.UA

Note)

1. Contrast Ratio(CR) is defined mathematically as

$$\text{Contrast Ratio} = \frac{\text{Surface Luminance with all white pixels}}{\text{Surface Luminance with all black pixels}}$$

2. Surface luminance is the average of 5 point across the LCD surface 50cm from the surface with all pixels displaying white. For more information see FIG 1.

$$L_{WH} = \text{Average}(L_1, L_2, \ldots L_5)$$

3. The variation in surface luminance , The panel total variation (δ_{WHITE}) is determined by measuring L_N at each test position 1 through 13 and then defined as followed numerical formula. For more information see FIG 2.

$$\delta_{WHITE} = \frac{\text{Maximum}(L_1, L_2, \ldots L_{13})}{\text{Minimum}(L_1, L_2, \ldots L_{13})}$$

4. Response time is the time required for the display to transition from white to black (rise time, Tr_R) and from black to white(Decay Time, Tr_D). For additional information see FIG 3.

5. Viewing angle is the angle at which the contrast ratio is greater than 10. The angles are determined for the horizontal or x axis and the vertical or y axis with respect to the z axis which is normal to the LCD surface. For more information see FIG 4.

6. Gray scale specification

* f_V= 60Hz

Gray Level	Luminance [%] (Typ)
L0	
L7	5#%
L15	5#%
L23	5#%
L31	5#%
L39	5#%
L47	5#%
L55	5#%
L63	

Shown by WWW.LCD-SCREEN.COM.UA

FIG. 2 Luminance

<Measuring point for Average Luminance & measuring point for Luminance variation>

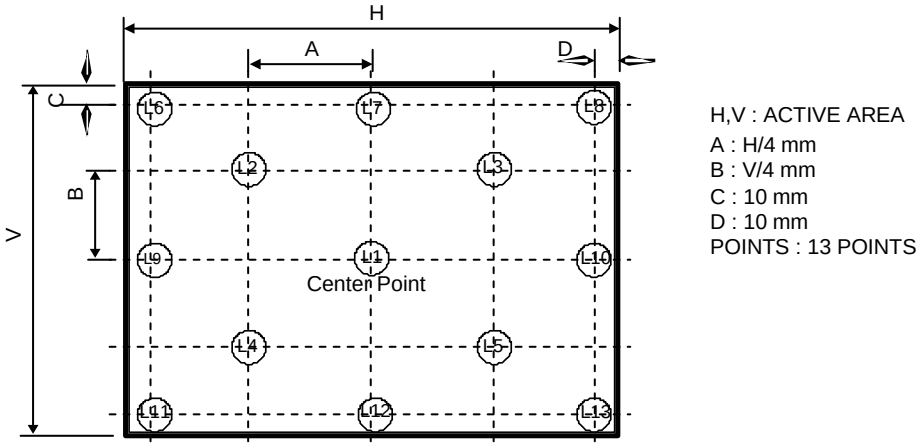

FIG. 3 Response Time

The response time is defined as the following figure and shall be measured by switching the input signal for "black" and "white".

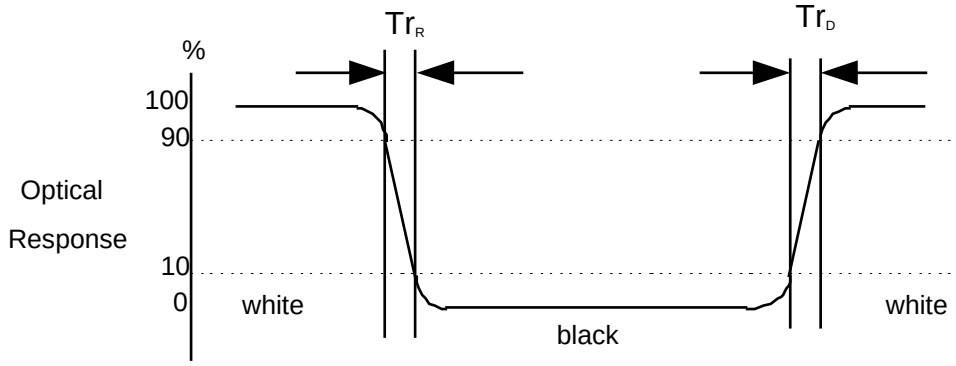

FIG. 4 Viewing angle

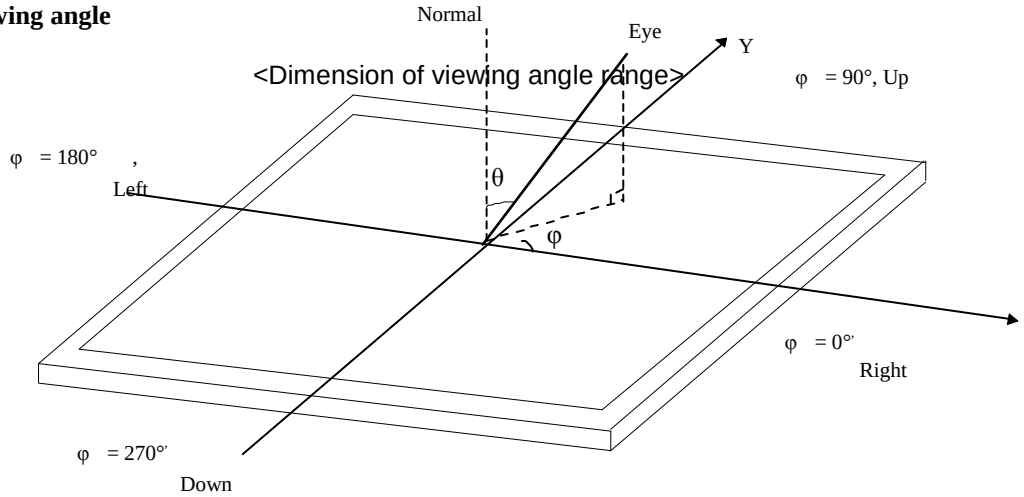

Shown by WWW.LCD-SCREEN.COM.UA

5. Mechanical Characteristics

The contents provide general mechanical characteristics for the model LP133WH2.
In addition the figures in the next page are detailed mechanical drawing of the LCD.

Outline Dimension	Horizontal	306.2 ± 0.50mm
	Vertical	177.6 ± 0.50mm
	Depth	3.5mm(Max.)
Bezel Area	Horizontal	296.62 mm
	Vertical	168.17 mm
Active Display Area	Horizontal	293.42mm
	Vertical	164.97 mm
Weight	300g(Max.)	
Surface Treatment	Hard coating(3H), Glare treatment of the front Polarizer (Haze 0%)	

Shown by WWW.LCD-SCREEN.COM.UA

<FRONT VIEW>

Note) Unit:[mm], General tolerance: ± 0.5mm

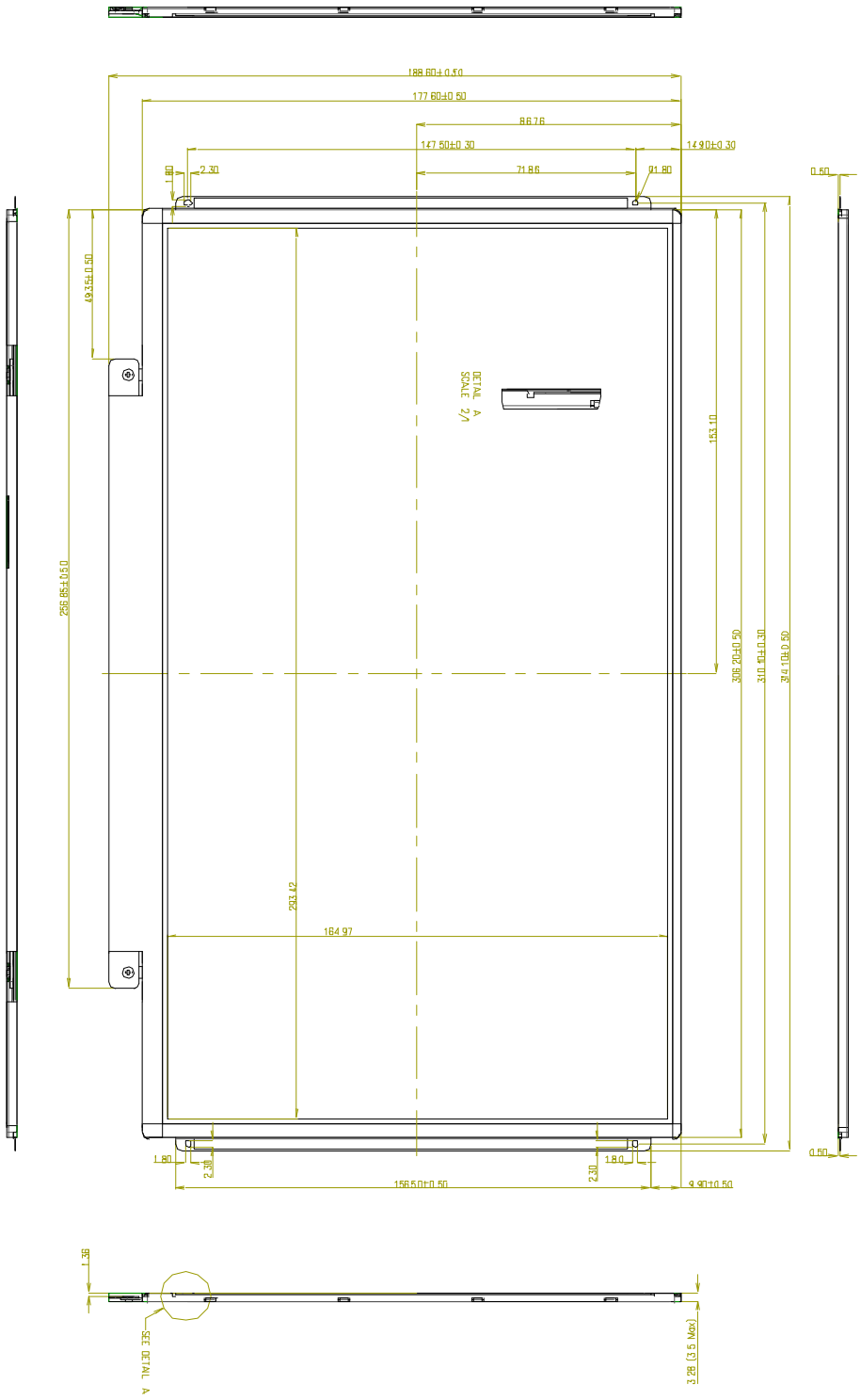

Shown by WWW.LCD-SCREEN.COM.UA

<REAR VIEW>

Note) Unit:[mm], General tolerance: ± 0.5mm

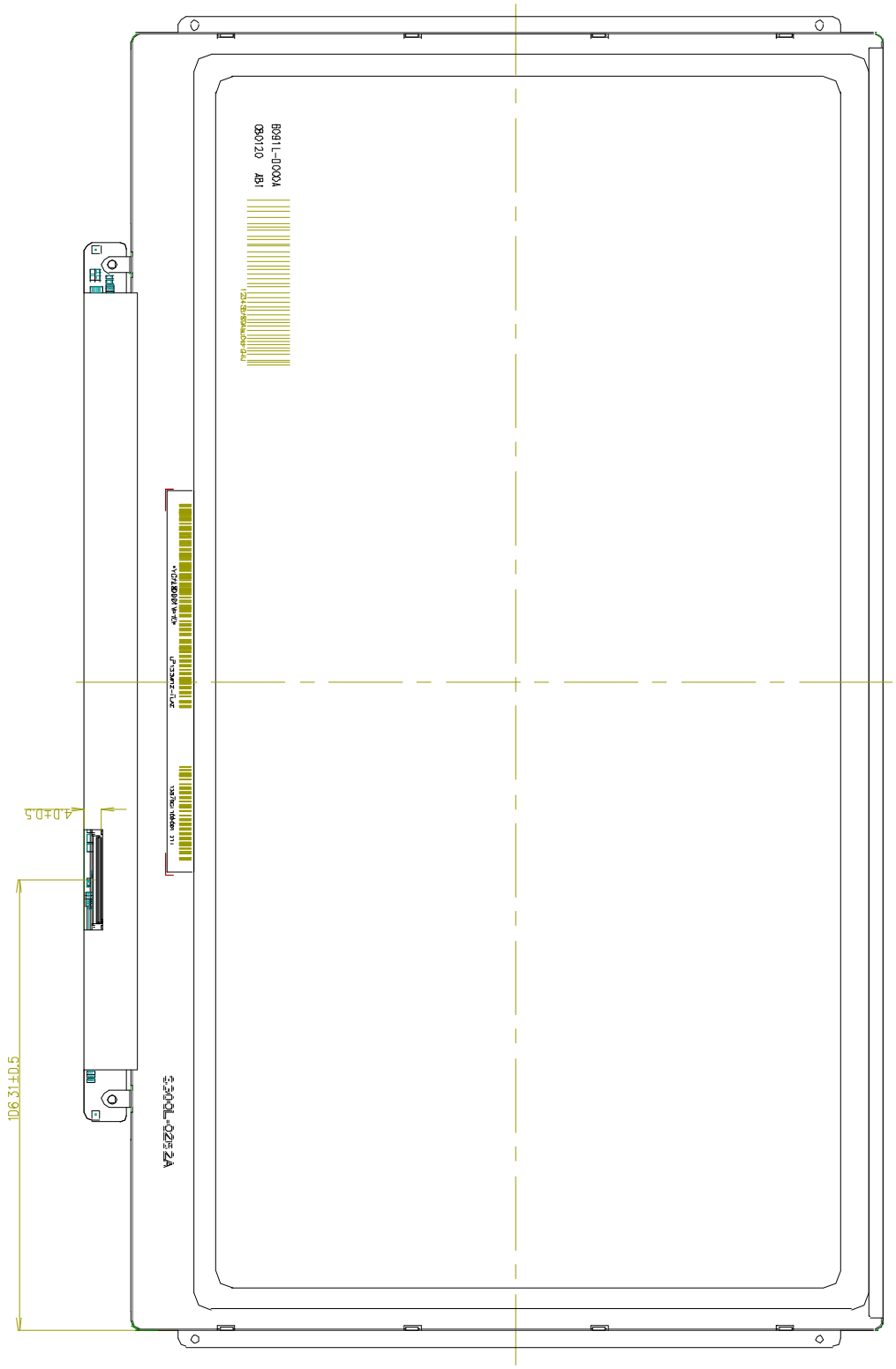

Shown by WWW.LCD-SCREEN.COM.UA

6. Reliability

Environment test condition

No.	Test Item	Conditions
1	High temperature storage test	Ta= 60°C, 240h
2	Low temperature storage test	Ta= -20°C, 240h
3	High temperature operation test	Ta= 50°C, 50%RH, 240h
4	Low temperature operation test	Ta= 0°C, 240h
5	Vibration test (non-operating)	Sine wave, 5 ~ 150Hz, 1.5G, 0.37oct/min 3 axis, 30min/axis
6	Shock test (non-operating)	- No functional or cosmetic defects following a shock to all 6 sides delivering at least 180 G in a half sine pulse no longer than 2 ms to the display module - No functional defects following a shock delivering at least 200 g in a half sine pulse no longer than 2 ms to each of 6 sides. Each of the 6 sides will be shock tested with one each display, for a total of 6 displays
7	Altitude operating storage / shipment	0 ~ 10,000 feet (3,048m) 24Hr 0 ~ 40,000 feet (12,192m) 24Hr

{ Result Evaluation Criteria }

There should be no change which might affect the practical display function when the display quality test is conducted under normal operating condition.

Shown by WWW.LCD-SCREEN.COM.UA

7. International Standards

7-1. Safety

a) UL 60950-1:2003, First Edition, Underwriters Laboratories, Inc.,
Standard for Safety of Information Technology Equipment.

7-2. EMC

a) ANSI C63.4 “Methods of Measurement of Radio-Noise Emissions from Low-Voltage Electrical and Electrical Equipment in the Range of 9kHZ to 40GHz. “American National Standards Institute(ANSI), 1992
b) CISPR22 “Limits and Methods of Measurement of Radio Interface Characteristics of Information Technology Equipment.“ International Special Committee on Radio Interference.
c) EN 55022 “Limits and Methods of Measurement of Radio Interface Characteristics of Information Technology Equipment.“ European Committee for Electrotechnical Standardization.(CENELEC), 1998 (Including A1: 2000)

Shown by WWW.LCD-SCREEN.COM.UA

8. Packing

8-1. Designation of Lot Mark

a) Lot Mark

A	B	C	D	E	F	G	H	I	J	K	L	M

A,B,C : SIZE(INCH)
D : YEAR
E : MONTH
F ~ M : SERIAL NO.

Note

1. YEAR

Year	2001	2002	2003	2004	2005	2006	2007	2008	2009	2010
Mark	1	2	3	4	5	6	7	8	9	0

2. MONTH

Month	Jan	Feb	Mar	Apr	May	Jun	Jul	Aug	Sep	Oct	Nov	Dec
Mark	1	2	3	4	5	6	7	8	9	A	B	C

b) Location of Lot Mark

Serial No. is printed on the label. The label is attached to the backside of the LCD module.
This is subject to change without prior notice.

8-2. Packing Form

a) Package quantity in one box : TBD pcs

b) Box Size : TBD

Shown by WWW.LCD-SCREEN.COM.UA

9. PRECAUTIONS

Please pay attention to the followings when you use this TFT LCD module.

9-1. MOUNTING PRECAUTIONS

(1) You must mount a module using holes arranged in four corners or four sides.
(2) You should consider the mounting structure so that uneven force (ex. Twisted stress) is not applied to the module. And the case on which a module is mounted should have sufficient strength so that external force is not transmitted directly to the module.
(3) Please attach the surface transparent protective plate to the surface in order to protect the polarizer. Transparent protective plate should have sufficient strength in order to the resist external force.
(4) You should adopt radiation structure to satisfy the temperature specification.
(5) Acetic acid type and chlorine type materials for the cover case are not desirable because the former generates corrosive gas of attacking the polarizer at high temperature and the latter causes circuit break by electro-chemical reaction.
(6) Do not touch, push or rub the exposed polarizers with glass, tweezers or anything harder than HB pencil lead. And please do not rub with dust clothes with chemical treatment.
Do not touch the surface of polarizer for bare hand or greasy cloth.(Some cosmetics are detrimental to the polarizer.)
(7) When the surface becomes dusty, please wipe gently with absorbent cotton or other soft materials like chamois soaks with petroleum benzene. Normal-hexane is recommended for cleaning the adhesives used to attach front / rear polarizers. Do not use acetone, toluene and alcohol because they cause chemical damage to the polarizer.
(8) Wipe off saliva or water drops as soon as possible. Their long time contact with polarizer causes deformations and color fading.
(9) Do not open the case because inside circuits do not have sufficient strength.

9-2. OPERATING PRECAUTIONS

(1) The spike noise causes the mis-operation of circuits. It should be lower than following voltage :
V=, 200mV(Over and under shoot voltage)

(2) Response time depends on the temperature.(In lower temperature, it becomes longer.)
(3) Brightness depends on the temperature. (In lower temperature, it becomes lower.)
And in lower temperature, response time(required time that brightness is stable after turned on) becomes longer.
(4) Be careful for condensation at sudden temperature change. Condensation makes damage to polarizer or electrical contacted parts. And after fading condensation, smear or spot will occur.
(5) When fixed patterns are displayed for a long time, remnant image is likely to occur.
(6) Module has high frequency circuits. Sufficient suppression to the electromagnetic interference shall be done by system manufacturers. Grounding and shielding methods may be important to minimized the interference.

Shown by WWW.LCD-SCREEN.COM.UA

9-3. ELECTROSTATIC DISCHARGE CONTROL

Since a module is composed of electronic circuits, it is not strong to electrostatic discharge. Make certain that treatment persons are connected to ground through wrist band etc. And don't touch interface pin directly.

9-4. PRECAUTIONS FOR STRONG LIGHT EXPOSURE

Strong light exposure causes degradation of polarizer and color filter.

9-5. STORAGE

When storing modules as spares for a long time, the following precautions are necessary.

(1) Store them in a dark place. Do not expose the module to sunlight or fluorescent light. Keep the temperature between 5°C and 35°C at normal humidity.
(2) The polarizer surface should not come in contact with any other object.
It is recommended that they be stored in the container in which they were shipped.

9-6. HANDLING PRECAUTIONS FOR PROTECTION FILM

(1) When the protection film is peeled off, static electricity is generated between the film and polarizer. This should be peeled off slowly and carefully by people who are electrically grounded and with well ion-blown equipment or in such a condition, etc.
(2) The protection film is attached to the polarizer with a small amount of glue. If some stress is applied to rub the protection film against the polarizer during the time you peel off the film, the glue is apt to remain on the polarizer.
Please carefully peel off the protection film without rubbing it against the polarizer.
(3) When the module with protection film attached is stored for a long time, sometimes there remains a very small amount of glue still on the polarizer after the protection film is peeled off.
(4) You can remove the glue easily. When the glue remains on the polarizer surface or its vestige is recognized, please wipe them off with absorbent cotton waste or other soft material like chamois soaked with normal-hexane.

Shown by WWW.LCD-SCREEN.COM.UA

APPENDIX A. Enhanced Extended Display Identification Data (EEDID™) 1/3

TBD

Shown by WWW.LCD-SCREEN.COM.UA

APPENDIX A. Enhanced Extended Display Identification Data (EEDID™) 2/3

TBD

Shown by WWW.LCD-SCREEN.COM.UA

APPENDIX A. Enhanced Extended Display Identification Data (EEDID™) 3/3

TBD